BRAKES, CALIPER, REAR - Z26SPD92AN/AH/BN/BH (C750607)

2026 RZR - RZR PRO S ULTIMATE (R01) - Z26SPD92AN/AH/BN/BH

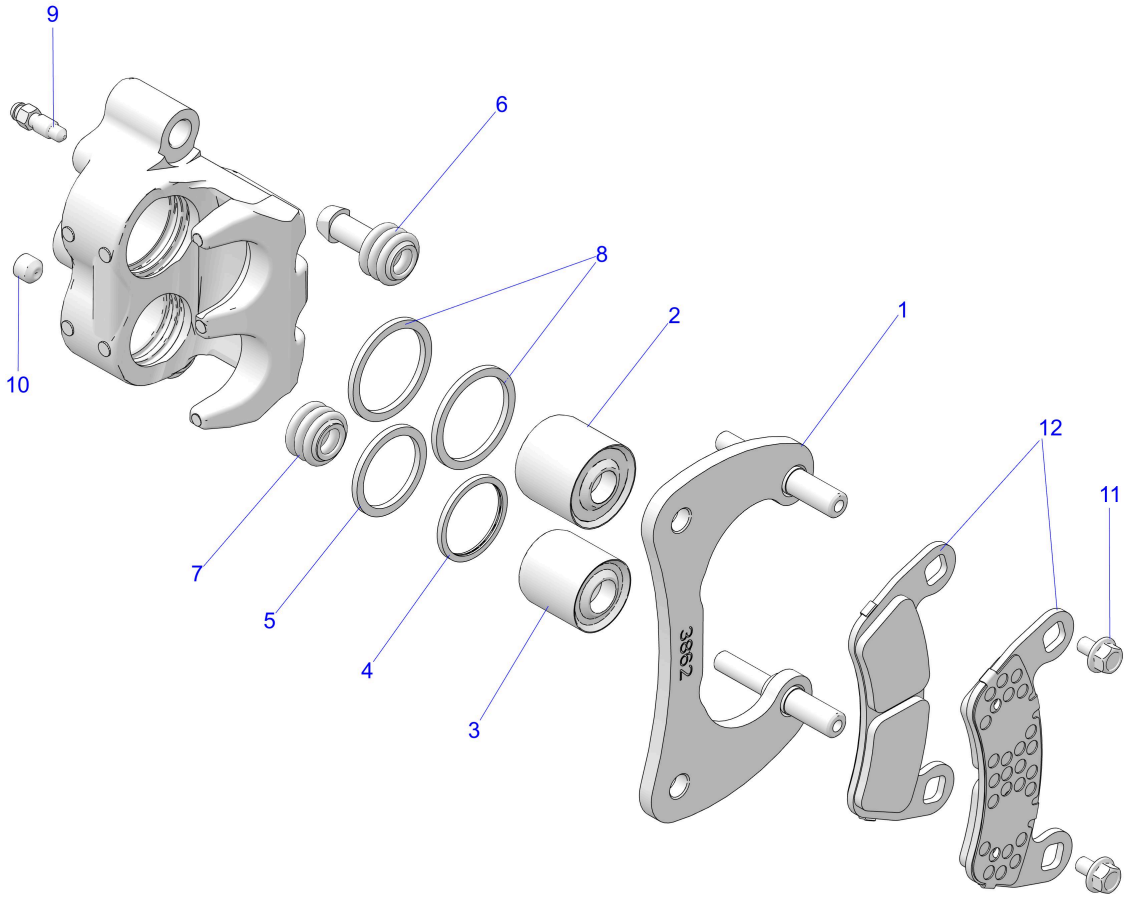

© 2024 Polaris Industries Inc. C750607

Reference #	*Part#*	*Description*	*Quantity*
	1914371	ASM-BRK-CAL-RL-DB,WT [INCL. ALL]	1
	1914372	ASM-BRK-CAL-RR-DB,WT [INCL. ALL]	1
1	1913862	ASM-CAL/MNT,REAR,RZR,74	1
2	5144813	PISTON-1-1/2 SS	1
3	5144964	PISTON-CLPR,1-3/16",SS SLUG	1
4	5410779	SQUARE RING-MOLDED (.094)	1
5	5410780	SQUARE RING, MOLDED (.103 X .134)	1
6	5412505	BOOT-PIN BUSHING	1
7	5412506	BOOT-PIN SEAL	1
8	5412907	SEAL-CALIPER,INNER,1.375"	2
9	7081343	SCR-M7X1.0,BLEEDER,OLIVE D	1
10	7518863	SCR-M10X1.0X8,SOC SET-OD	1
11	7521328	SCR-HXFL-M6X1.0X10 8.8 ZF	2
12	2211634	K-BRAKE PAD ASM (INCL 2 PADS) [INCLS. 2 PADS & 2 SCREWS]	1

Copyright 1996-2026 Polaris Industries U.S.A All rights reserved.